Bulletin of the Seismological Society of America, Vol. 76, No. 4, pp. 1143–1150, August 1986

LETTERS TO THE EDITOR

A PRELIMINARY STUDY OF CODA Q IN CALIFORNIA AND NEVADA

By W. H. K. Lee, K. Aki, B. Chouet, P. Johnson, S. Marks, J. T. Newberry, A. S. Ryall, S. W. Stewart, and D. M. Tottingham

The decay rate of local earthquake coda is characteristic of the area in which the epicenter and stations are located (Aki, 1969; Aki and Chouet, 1975; Rautian and Khalturin, 1978; Tsujiura, 1978). Aki (1980) interpreted the coda decay rate in terms of the attenuation property of S waves in the lithosphere under the area. The Q of S waves inferred from coda waves is called "coda Q."

Recently, several papers reported temporal changes in coda Q prior to the occurrence of large earthquakes. They are: (1) the Tangshan earthquake ($M = 7.8$) of 1976 and the Haicheng earthquake ($M = 7.4$) of 1975 (Jin and Aki, 1986); (2) three earthquakes ($M = 8$) in the Kuril-Kamchatka region (Gusev and Lemzikov, 1985); (3) the Kalapana, Hawaii, earthquake ($M = 7.2$) of 1975 (Wilson *et al.*, 1983); and (4) the eastern Yamanashi, Japan, earthquake ($M = 6.0$) of 8 August 1983 (Sato, 1986). In all these cases, the coda Q was reported to be anomalously low before the occurrence of the earthquake. However, in a detailed study by Chouet (1979), a strong fluctuation of coda Q with time was observed in Bear Valley, California, which was not followed by a significant earthquake. A recent coda Q study in the Adak seismic zone by Scherbaum and Kisslinger (1985) also did not find significant coda Q changes that could be related to a $m_b = 5.8$ earthquake which occurred in the area of investigation.

In order to evaluate the feasibility of using coda Q for earthquake prediction research in California and Nevada, we began a systematic study of coda Q using digital waveform data from the regional microearthquake networks operated by the U.S. Geological Survey and the University of Nevada.

Data Processing for Coda Q

Figure 1 shows a schematic diagram of data processing for estimating coda Q. The left half of the diagram shows the data acquisition of digital waveforms and associated data from an online system operated at the U.S. Geological Survey, Menlo Park. It is part of the CUSP system originally developed by Carl Johnson and later modified for use at Menlo Park (Johnson and Stewart, 1986). A similar online system is used at the University of Nevada, Reno. After selecting events from the data tapes, we carried out further processing at the Stanford Linear Accelerator Center using an IBM 3081-K mainframe computer. As shown on the right-hand side of Figure 1, coda Q estimates are obtained from a step-by-step computational procedure following the concept of file-oriented processing. Each processing step creates documented output file(s) which are in turn used as input file(s) in the next step. We adopted this scheme of modular data processing because of the ease of implementation on computers.

According to Aki and Chouet [1975, equation (27)], the coda amplitude $A(\omega \mid t)$ at angular frequency ω and lapse time t (measured from the origin time) is given by

$$A(\omega \mid t) = c(\omega)\, t^{-\alpha}\, e^{-\omega t/2Q} \tag{1}$$

where $c(\omega)$ represents the coda source factor, α is a constant that depends on geometrical spreading, and Q is the quality factor. By performing linear regression of $\ln(At^{\alpha})$ versus t, we may obtain Q^{-1} from the slope of fit, b, by

$$Q^{-1}(\omega) = 2b/\omega = b/(\pi f) \tag{2}$$

where f is frequency in cycles/second.

In practice, the original digitized seismic waveform data (100 samples/sec) together with the auxiliary data, such as origin time, hypocenter location, and magnitude, are first organized as earthquake data files in the manner described by Lee *et al.* (1983). Using this scheme, we can select any station record from any earthquake with ease because the computerized system keeps track of the data records. For a selected earthquake, we generate a record section with the seismic traces arranged by increasing epicentral distance. From this record section, a data analyst decides whether or not this earthquake has a sufficient number of good stations (usually 20 or more) and decides which station records have high enough

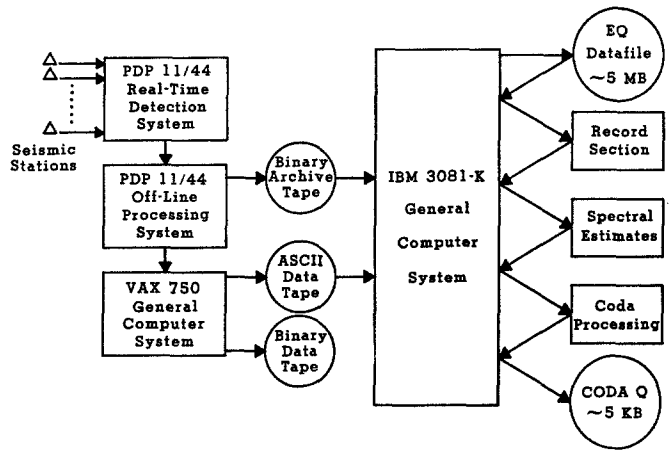

FIG. 1. Schematic diagram of data processing for estimating coda Q.

signal quality to be processed. Judgment on signal quality is rather subjective: good station records should have coda amplitudes that are several times larger than the noise amplitudes preceding the earthquake, and station signals with spikes should be rejected. For each selected station, a Fast Fourier transform is performed on the data in overlapping, moving windows for the entire station record. Power spectra are then calculated over five consecutive octave frequency bands centered at 1.5, 3, 6, 12, and 24 Hz, and corrected for instrument response. We typically use a window size of 512 data samples (corresponding to 5.12 sec) and advance the window by 2.56 sec.

To avoid contamination by body and surface waves, only coda data collected at lapse times greater than twice the S arrival time are included in the analysis following the criterion for a common decay curve given by Rautian and Khalturin (1978). We then correct the coda amplitude for geometrical spreading using Sato's (1977) formula which is appropriate for coda waves in the near-field. The logarithm of the corrected spectral amplitude is linearly related to the lapse time according to the single back-scattering theory of coda waves [i.e., equation (1)], and Q^{-1} is then calculated from equation (2). We perform linear regressions in three coda time

windows (10 to 25 sec, 20 to 45 sec, and 30 to 60 sec) to estimate Q^{-1}. The sampling volume for coda waves at lapse time T is an ellipsoid with semi-major axis equal to $V_S \cdot T/2$, where V_s is the S velocity (Scherbaum and Kisslinger, 1985). Using a typical crustal V_s value of 3 km/sec, these three Q^{-1} estimates correspond to sampling volumes in spatial extent of approximately 25, 50, and 70 km. Finally, for each earthquake, the Q^{-1} values obtained for all stations (except those with relative error greater than 40 per cent) for a given frequency band and a given coda window are averaged. Thus, we obtain a set of 15 (5 frequency bands × 3 coda windows) Q^{-1} averages for a given earthquake.

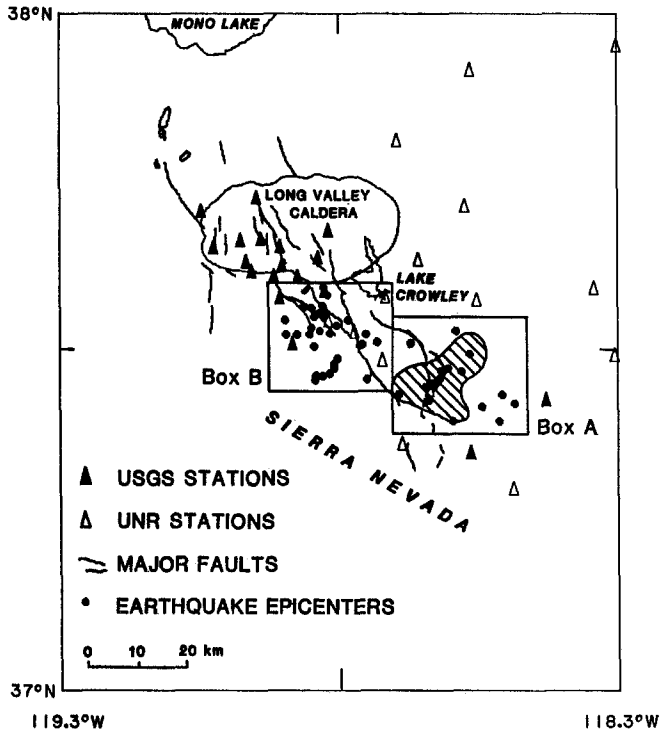

FIG. 2. Map showing seismic stations operated by the University of Nevada (UNR) and the U.S. Geological Survey (USGS) in the Long Valley region. The *shaded area* is the aftershock zone of the Round Valley earthquake of 23 November 1984. The small dots are epicenters of earthquakes used for the coda Q study.

BEHAVIOR OF CODA Q IN LONG VALLEY, CALIFORNIA

We chose Long Valley region as the first site for our coda Q study because of the Round Valley earthquake ($M = 5.7$) of 23 November 1984. The tectonic setting for the Long Valley region has been recently reviewed by Hill *et al.* (1985). Our data began in April 1984, the date at which the U.S. Geological Survey online data acquisition systems started full operation. We plan to analyze earlier data, but this requires a laborious job of digitizing data from the recorded analog tapes.

The seismic stations operated by the University of Nevada and the U.S. Geological Survey in the Long Valley region are shown in Figure 2. We first identified all U.S. Geological Survey-located earthquakes in this region from 1 April to 23 November 1984. Since earthquakes with magnitude smaller than 2 usually have less than 20

well-recorded stations, we concentrated on analyzing earthquakes with magnitude 2 or greater. A representative sample of earthquakes was also selected for the period following the Round Valley earthquake and extending to the end of January 1985. We accumulated a total of about 150 earthquakes (each one typically recorded on 100 stations) and performed the coda Q analysis as described in the previous section in March 1985. After the data analysis, we found that adequate coda Q^{-1} estimates could not be obtained for the coda window from 10 to 25 sec because the Rautian-Khalturin selection criterion requires stations to be within 15 km of the earthquake hypocenter. Because our seismic instrument response drops off rapidly at frequencies below 1 Hz and above 25 Hz, we also discarded results from the first and the

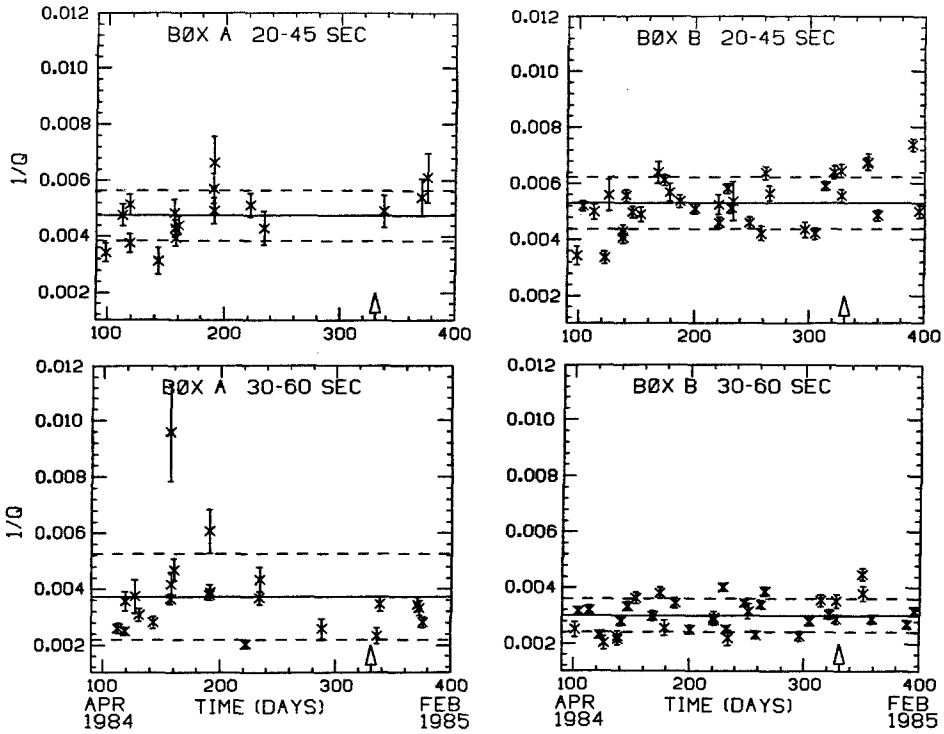

FIG. 3. Temporal variation of coda Q^{-1} at 3 Hz for earthquakes in Box A (*left*) and in Box B (*right*). The arrow on the time axis indicates the occurrence of the main shock. See text for details.

last frequency bands. Therefore, we are left with a set of six coda Q^{-1} averages for each selected earthquake.

To study the spatial-temporal behavior of coda Q prior to the Round Valley earthquake, we selected two subareas for comparison as shown in Figure 2. Box A is a rectangular area (about 20 km by 25 km) which includes the aftershock area of the Round Valley earthquake. Because of a lack of magnitude 2 earthquakes in the aftershock area during the 2 months preceding the Round Valley earthquake, Box A was chosen to include several earthquakes which occurred nearby during that period. Box B is a rectangular area of size similar to Box A, but is located to the northwest of the aftershock area and just south of the Long Valley caldera.

The temporal behavior of coda Q for earthquakes in the aftershock area (Box A of Figure 2) is shown in the left-hand side of Figures 3 to 5. The average value and standard error of coda Q^{-1} obtained for each earthquake is plotted against the time

of occurrence of the earthquake. The horizontal lines represent the mean of the coda Q^{-1} averages for the entire period, and the dashed lines represent one standard deviation about the mean. The upper and lower plots in Figures 3 to 5 correspond to the sampling of the coda waves over two different time windows (measured from the earthquake origin time) of 20 to 45 sec, and 30 to 60 sec, respectively. These two coda time windows sample a volume of the earth in spatial extent of about 50 and 70 km, respectively. Fifty-eight of the approximately 150 earthquakes that we processed fall in these two subareas; their epicenters are also shown in Figure 2 (22 earthquakes in Box A and 36 in Box B). The number of well-recorded stations used in computing coda Q^{-1} for these earthquakes ranges from a few to a maximum of 24.

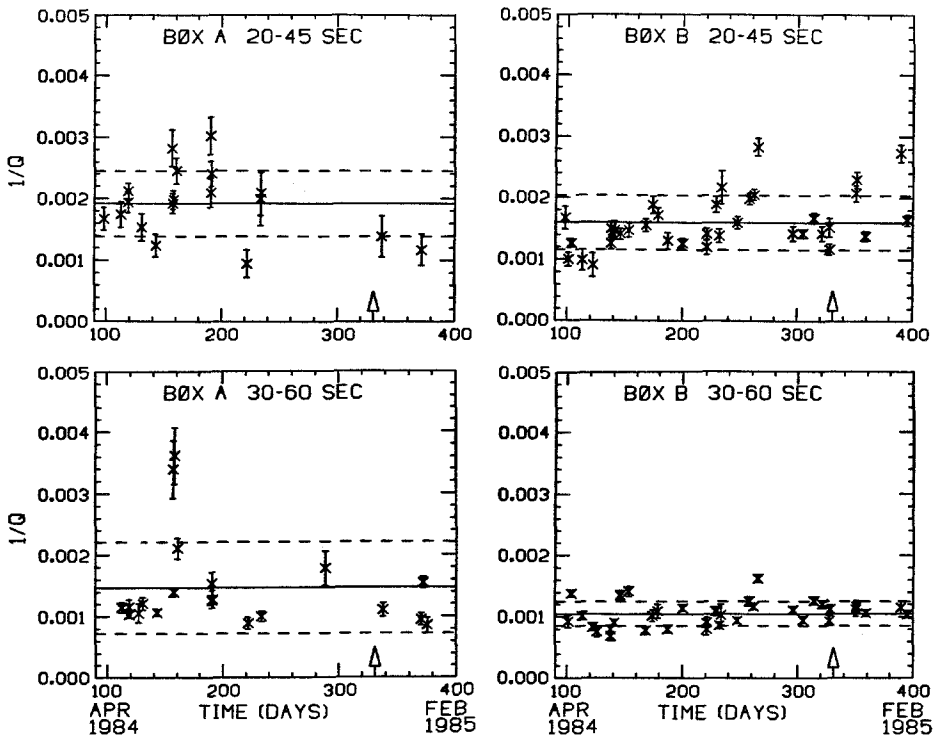

FIG. 4. Temporal variation of coda Q^{-1} at 6 Hz for earthquakes in Box A (*left*) and in Box B (*right*). The arrow on the time axis indicates the occurrence of the main shock. See text for details.

Figures 3 to 5 show a decrease of coda Q^{-1} with frequency, or an increase of coda Q with frequency, namely a Q value from about 250 at 3 Hz to about 1400 at 12 Hz. For the coda window of 20 to 45 sec, the coda Q^{-1} averages are highly scattered from the mean value for earthquakes in Box A and Box B. For the coda window of 30 to 60 sec, the coda Q^{-1} averages are far more scattered from the mean value for earthquakes in Box A than those in Box B. These patterns are similar for all three frequency bands. Such results are consistent with an idea that the source region of the Round Valley earthquake is more fractured and thus attenuates the coda waves more effectively. Earthquakes in Box A sample this source region more effectively than those in Box B. Coda waves at a window of 30 to 60 sec sample a volume that is nearly three times larger than that at 20 to 45 sec. Thus, local variations of coda Q would have a lesser effect for coda Q^{-1} averages at the coda time window of 30 to

60 sec than that of 20 to 45 sec. Alternatively, the greater variability of coda Q^{-1} averages in Box A versus Box B could be due to variation in the source-receiver paths. Using more earthquakes over longer periods and examining path effects will help clarify the situation.

There is also a slight suggestion that coda Q^{-1} averages for earthquakes in Box A during the period from about May to June 1984 may be higher than the mean value. We have checked possible causes for this temporal fluctuation, such as focal depth, epicenter location, magnitude, etc., but we could not find any obvious relationship. It may be tempting to consider the higher May–June coda Q^{-1} averages in Box A

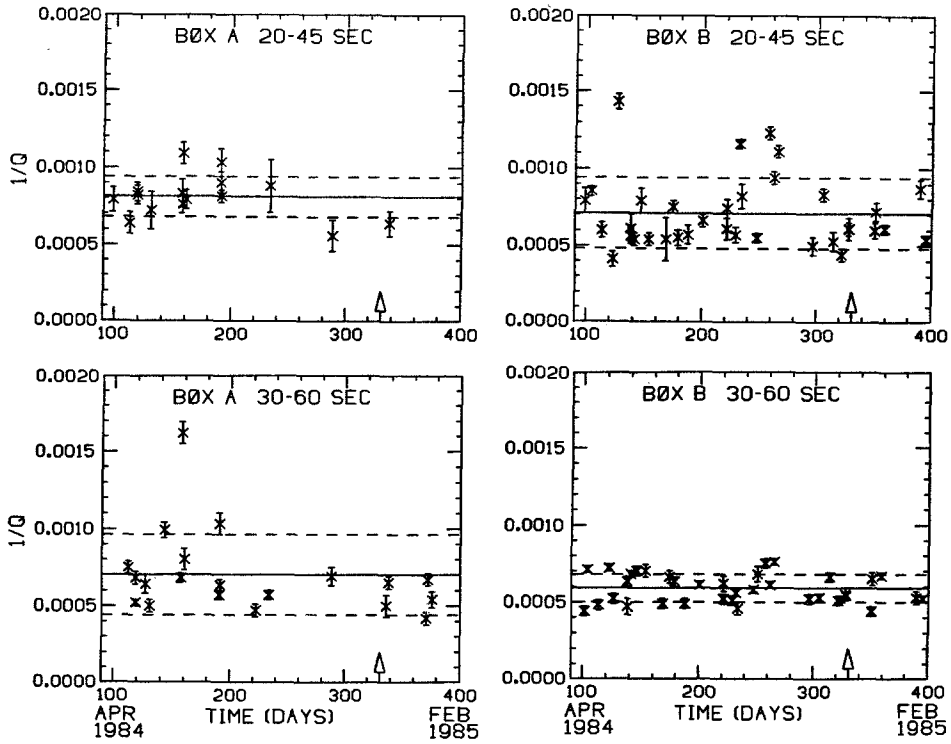

FIG. 5. Temporal variation of coda Q^{-1} at 12 Hz for earthquakes in Box A (*left*) and in Box B (*right*). The arrow on the time axis indicates the occurrence of the main shock. See text for details.

area to be associated with rock dilatancy (because crack forming will increase attenuation of seismic waves) and to argue that this is an earthquake precursor for the November Round Valley earthquake according to the dilatancy hypothesis advanced by Scholz *et al.* (1973). However, since we do not yet have an adequate baseline for comparison, it would be best not to speculate until we process the pre-April 1984 data.

CONCLUSIONS

The primary purpose of the present study is to evaluate the feasibility of using coda Q for earthquake prediction research. We are aware that the single backscattering theory of coda waves may be an inadequate approximation, but treating multiple scattering is more difficult and beyond our scope. In this study, we

demonstrated that a large-scale data processing project for studying coda Q could be undertaken with the current computer technology. We processed over 15,000 seismic records (each with about 10,000 data samples) at a rate of about 1 min/record using an interactive computerized system. Our preliminary result indicates that coda Q^{-1} averages for earthquakes in the aftershock area of the Round Valley earthquake of 23 November 1984 are more scattered than those for earthquakes in an adjacent area. This result is encouraging and suggests that coda Q study of local earthquakes may be used profitably for earthquake prediction research. However, much work remains to establish an adequate baseline and to understand variations of coda Q due to other factors, such as signal quality, hypocenter, and station distribution, etc. The variability of coda Q for different stations and hypocenters is rather large. This may require appropriate averaging over a large number of stations and events to obtain a stable and accurate estimate of coda Q at a given time. We are now undertaking a program to improve the stability and accuracy of the coda Q measurement, and to analyze coda Q systematically for earthquakes in California and Nevada.

Acknowledgments

We wish to thank Rob Cockerham, Dave Hill, Scott Phillips, and Jim Savage for their comments on the manuscript and suggestions for improvement. This work was supported by the Department of Energy under contract DE-FG03-85ER 13336 and by the U.S. Geological Survey under Contract 14080001A0036.

References

Aki, K. (1969). Analysis of the seismic coda of local earthquakes as scattered waves, *J. Geophys. Res.* **74,** 615–631.

Aki, K. (1980). Scattering and attenuation of shear waves in the lithosphere, *J. Geophys. Res.* **85,** 6496–6504.

Aki, K. and B. Chouet (1975). Origin of coda waves: source, attenuation and scattering effects, *J. Geophys. Res.* **80,** 3322–3342.

Chouet, B. (1979). Temporal variation in the attenuation of earthquake coda near Stone Canyon, California, *Geophys. Res. Letters* **6,** 143–146.

Gusev, A. A. and V. K. Lemzikov (1985). Properties of scattered elastic waves in the lithosphere of Kamchatka: parameters and temporal variations, *Tectonophysics* **112,** 137–153.

Hill, D. P., R. A. Bailey, and A. S. Ryall (1985). Active tectonic and magmatic processes beneath Long Valley caldera, eastern California: an overview, *J. Geophys. Res.* **90,** 11111–11120.

Jin, A. and K. Aki (1986). Temporal change in coda Q before the Tangshan earthquake of 1976 and the Haicheng earthquake of 1975, *J. Geophys. Res.* **91,** 665–673.

Johnson, P. and S. W. Stewart (1986). Caltech-USGS Seismic Processing System (CUSP): user documentation, *U.S. Geol. Surv., Open-File Rept.*

Lee, W. H. K., D. L. Scharre, and G. R. Crane (1983). A computer-based system for organizing earthquake related data, *U.S. Geol. Surv., Open-File Rept. 83-518,* 28 pp.

Rautian, T. G. and V. I. Khalturin (1978). The use of the coda for determination of the earthquake source spectrum, *Bull. Seism. Soc. Am.* **68,** 923–948.

Sato, H. (1977). Energy propagation including scattering effects, singel isotropic approximation, *J. Phys. Earth* **25,** 27–41.

Sato, H. (1986). Temporal change in attenuation intensity before and after the eastern Yamanashi earthquake of 1983 in central Japan, *J. Geophys. Res.* (in press).

Scherbaum, F. and C. Kisslinger (1985). Coda Q in the Adak seismic zone, *Bull. Seism. Soc. Am.* **75,** 615–620.

Scholz, C. H., L. R. Sykes, and Y. P. Aggarwal (1973). Earthquake prediction: a physical basis, *Science* **181,** 803–810.

Tsujiura, M. (1978). Spectral analysis of the coda waves from local earthquakes, *Bull. Earthquake Res. Inst., Tokyo Univ.* **53,** 1–48.

Wilson, M., M. Wyss, and R. Koyanagi (1983). Temporal attenuation changes in the Koae fault system, southern Hawaii, *EOS* **64,** 761.

U.S. Geological Survey
345 Middlefield Road
MS 77
Menlo Park, California 94025
(W.H.K.L., B.C., P.J., S.M., J.T.N., S.W.S., D.M.T.)

Department of Geological Sciences
University of Southern California
Los Angeles, California 90007 (A.K.)

Center for Seismic Studies
1300 North 17th Street
Suite 1450
Arlington, Virginia 22209 (A.S.R.)

Manuscript received 7 November 1985